25'(5$%/('(9,&(	3$&.$*,1* 7<3(	67$1'$5' 3$&. 47<	3$&.$*(0$5.,1*	3,16	3$&.$*('(6&5,37,2

'(6&5,37,21	0,1	0$;	81,7

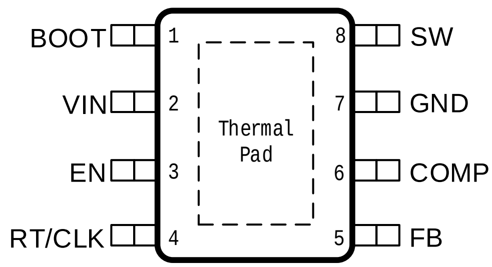

)LJXUH /HDG 3O(6623LF

6 & 7 %

)UHTXHQF\ 6SUHDG 6SHFWUXP

/LQH)DUHTXHQFG XFWLRQ

%RRWVWUDS 9ROWDJH 5'HJRXDWSRU DWLRQ RZ

7\SLFDO $SSOLFDWLRQ

)LJXUH6&7 %'HVLJQ ([DPSOH&LUFXLW ZLWK 3URJUDPPDEOH 89/

'HVLJQ3DUDPHWHUV

'HVLJQ 3DUDPHWHUV	([DPSOH 9DOXH

,QGXFWRU 6HOHFWLRQ

=

$$_1 = \frac{1}{2^{\quad 7}} = \frac{}{2^{\quad 7}}$$

$$_2 = \frac{1}{2} = \frac{}{2}$$

x
x
x

$$f_1 = \frac{1}{2^{\quad 7 \quad 4}}$$

$$f_2 = \frac{1}{2}$$

,QYHUWLQJ 3RZHU DSSOLFDWLRQ

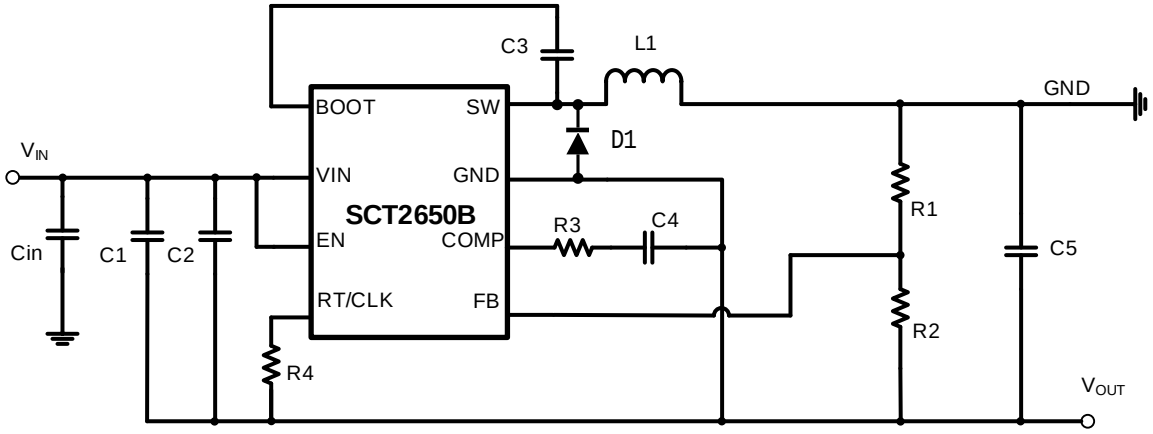

$SSOLFDWLRQ :DYHIRUPV

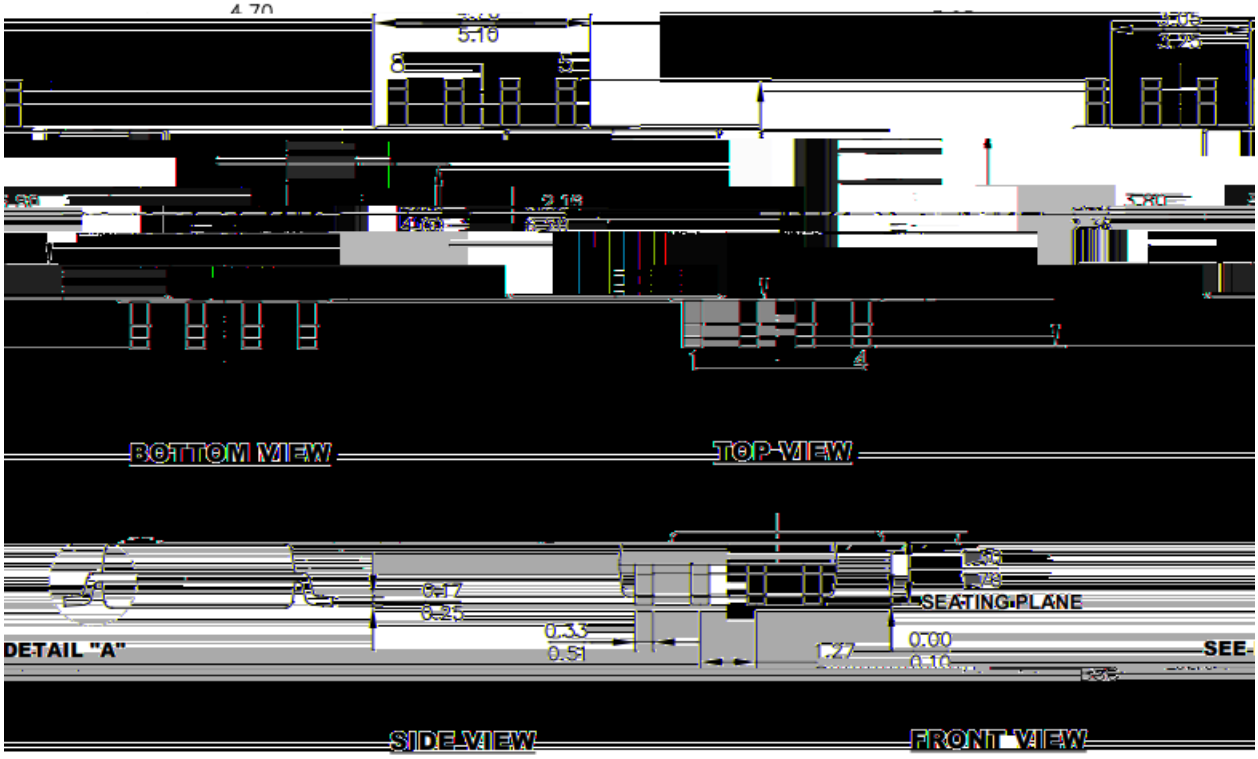
4.70
5.18
2.19
BOTTOM VIEW
TOP VIEW
0.17
0.25
0.33
0.51
1.27
0.00
0.10
SEATING PLANE
DETAIL "A"
SEE
SIDE VIEW
FRONT VIEW

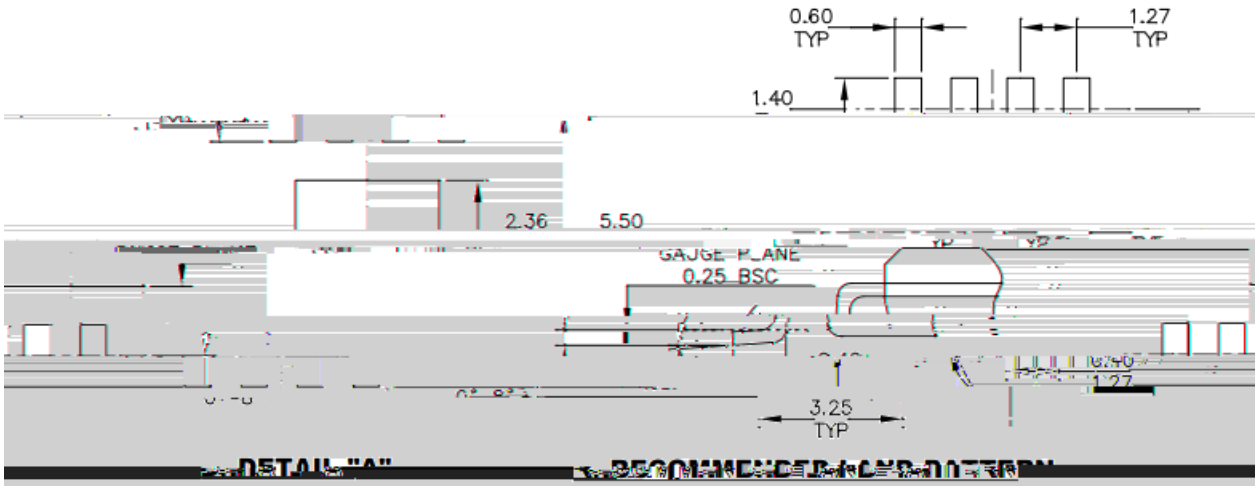
0.60
TYP
1.27
TYP
1.40
2.36
5.50
GAUGE PLANE
0.25 BSC
1.27
3.25
TYP
DETAIL "A"

NOTE:

1 2 7 , & (