3.8V-28V Vin, 3A Synchronous Step-down DCDC Converter with EMI Reduction

FEATURES

– 6% Frequency Spread

REVISION HISTORY

DEVICE ORDER INFORMATION

ORDERABLE DEVICE	PACKAGING TYPE	STANDARD PACK QTY	PACKAGE MARKING	PINS	PACKAGE DESCRIPTION

ABSOLUTE MAXIMUM RATINGS

Over operating free-air temperature unless otherwise noted[1]

PIN CONFIGURATION

SW	5	Switching node of the buck converter.
BST	6	Power supply for the high-side power MOSFET gate driver. Must connect a 0.1uF or greater ceramic capacitor between BST pin and SW node.

RECOMMENDED OPERATING CONDITIONS

PARAMETER	DEFINITION	MIN	MAX	UNIT

TYPICAL CHARACTERISTICS

OPERATION

Overview

Bootstrap Voltage Regulator

Low Drop-out Regulation

Thermal Shutdown

APPLICATION INFORMATION

Typical Application

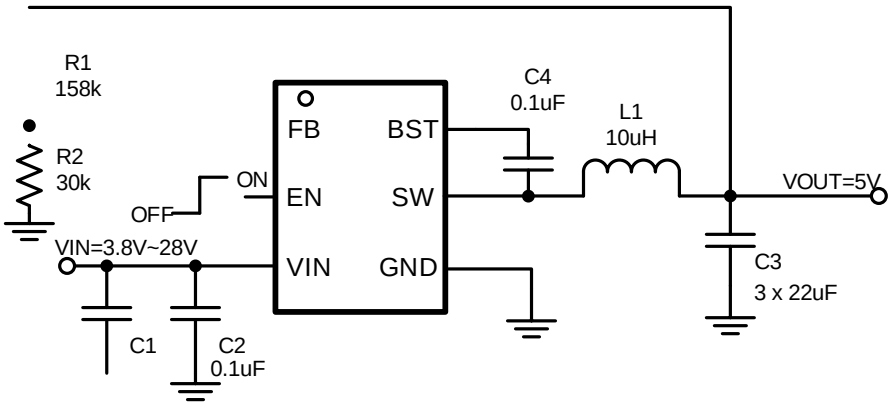

Figure 11. 24V Input, 5V/3A Output

Design Parameters

Design Parameters	Example Value
Input Voltage	24V
Output Voltage	5V
Output Current	3A
Output voltage ripple (peak to peak)	±8mV
Switching Frequency	400kHz

Output Feed-Forward Capacitor Selection

$$= \frac{1}{2 \cdot \quad \times \quad _{1}} \tag{10}$$

Output Feedback Resistor Divider Selection

$$_{1} = \frac{(\quad - \quad) \times \quad _{2}}{} \tag{11}$$

Application Waveforms (Continued)

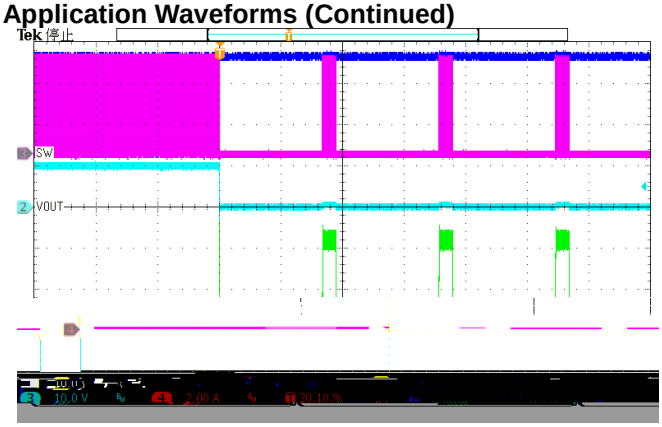

Figure 18. Over Current Protection(0A to hard short)

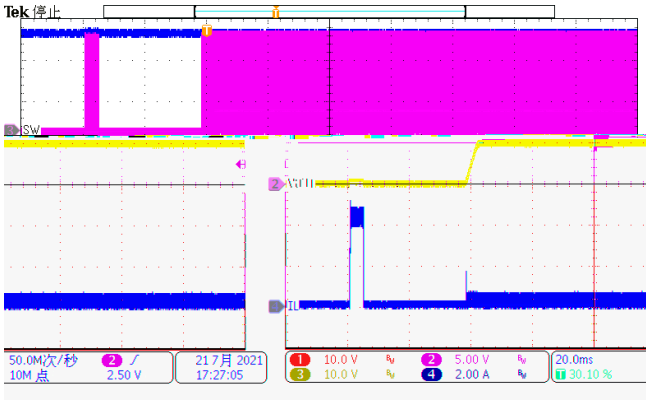

Figure 19. Over Current Release (hard short to 0A)

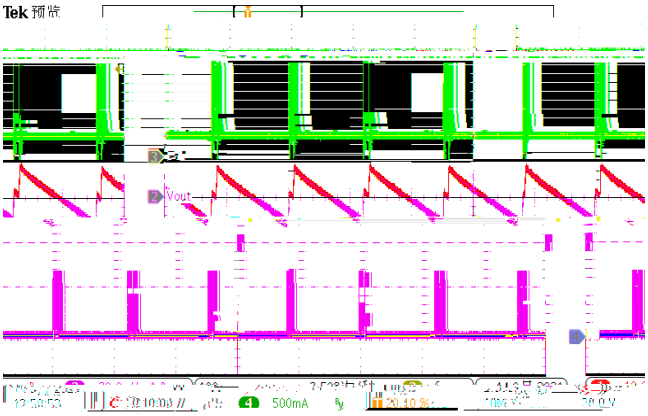

Figure 20. Output Ripple (Iload=10mA)

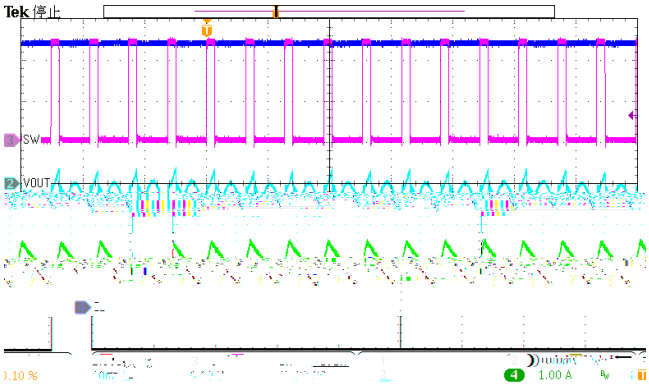

Figure 21. Output Ripple (Iload=1A)

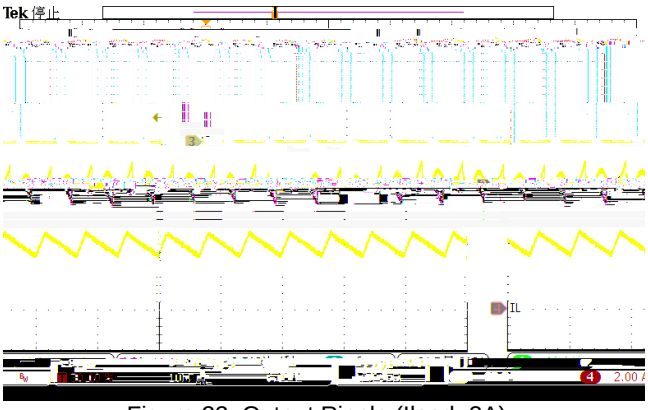

Figure 22. Output Ripple (Iload=3A)

Figure 23. Thermal, 24VIN, 5Vout, 3A

Layout Guideline

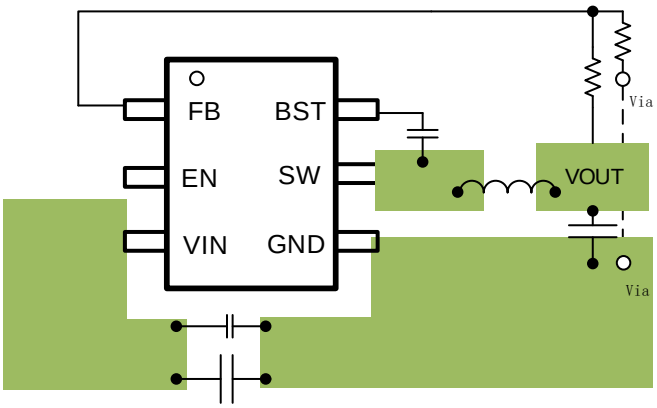

Thermal Considerations

PACKAGE INFORMATION

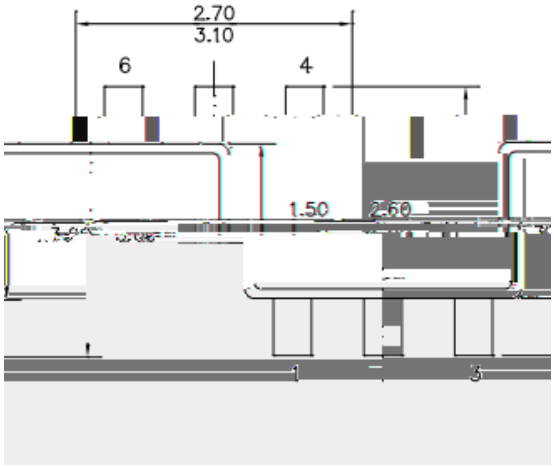

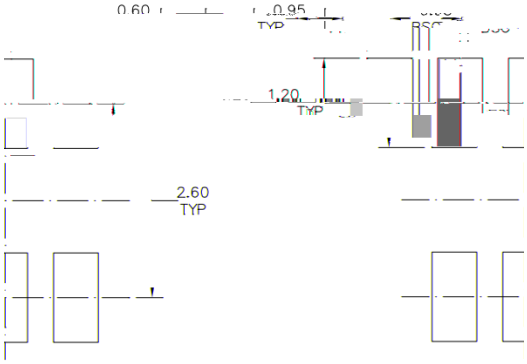

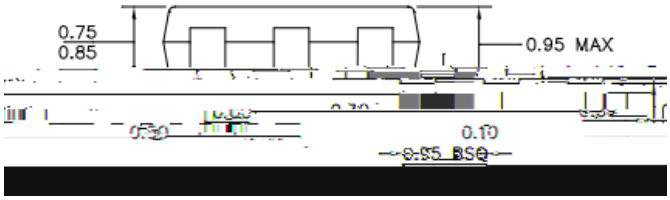

NOTE:

1.
2.
3.
4.
5.
6.
7.

TAPE AND REEL INFORMATION

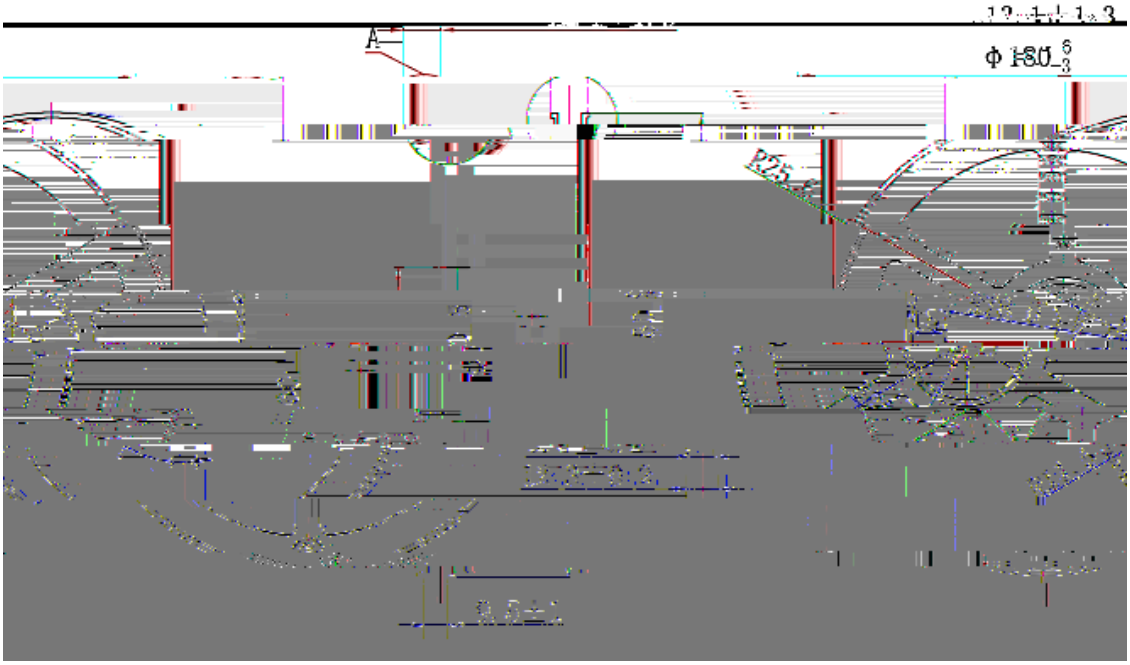

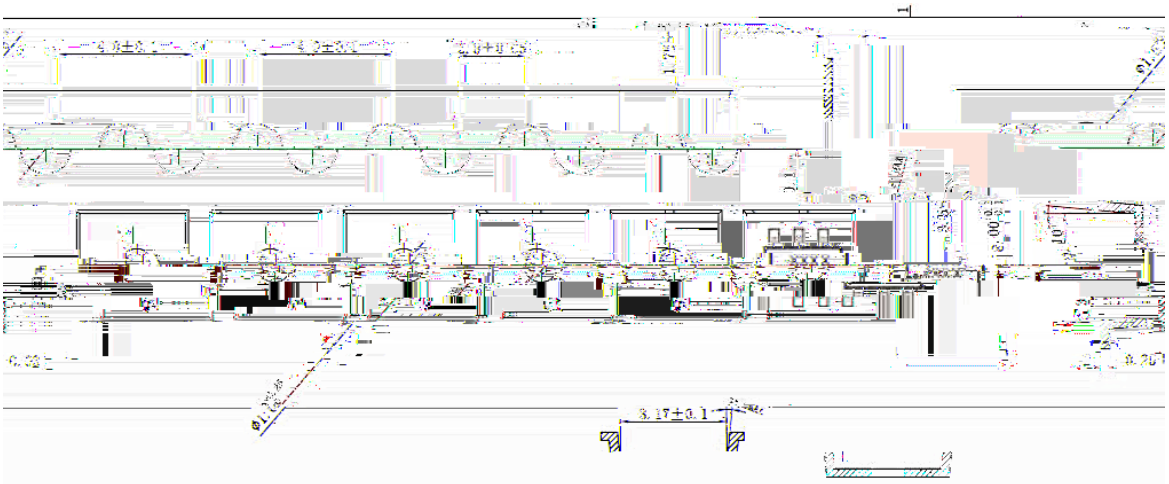

Feeding Direction