Revision 1.0: Released to market

ORDERABLE DEVICE	PACKAGING TYPE	STANDARD PACK QTY	PACKAGE MARKING	PINS	PACKAGE DESCRIPTION	MSL
SCT44160AMZER	Tape & Reel	4000	160A	28	ETSSOP-28L	3
SCT44160BMZER	Tape & Reel	4000	160B	28	ETSSOP-28L	3
SCT44160CMZER	Tape & Reel	4000	160C	28	ETSSOP-28L	3

Over operating free-air temperature unless otherwise noted(1)

DESCRIPTION	MIN	MAX	UNIT
VS (t < 400 mS)	-0.3	45	V
Reverse polarity voltage	-36		V
Current on GND (t < 2 minutes)	-100	250	mA
Voltage on INx, DIAG_EN, SEL, SEH, and THER	-0.3	7	V
Current on INx, DIAG_EN, SEL, SEH, and THER	-10		mA
Voltage on STx or FAULT	-0.3	7	V
Current on STx or FAULT	-30	10	mA
Voltage on CS	--2.7	7	V
Current on CS		30	mA
Voltage on CL, CL1, CL2, CL3, CL4	-0.3	7	V
Current on CL, CL1, CL2, CL3, CL4		6	mA
Inductive load switch-off energy dissipation, single pulse, single channel		40	mJ
Junction temperature(2)	-40	150	C
Storage temperature T_{STG}	-65	150	C

 © 2026 Silicon Content Technology Co., Ltd. All Rights Reserved

 © 2026 Silicon Content Technology Co., Ltd. All Rights Reserved

 © 2026 Silicon Content Technology Co., Ltd. All Rights Reserved

PARAMETER	THERMAL METRIC	ETSSOP-28L	UNIT
$R_{\theta JA}$	Junction to ambient thermal resistance(1)	24.27	°C/W
$R_{\theta JC\ (top)}$	Junction to case (top) thermal resistance(1)	32.11	
$R_{\theta JC\ (bot)}$	Junction to case (bottom) thermal resistance(1)	2.49	
$R_{\theta JB}$	Junction to board thermal resistance(1)	9.17	
$R_{\psi JT}$	Junction-to-top characterization parameter	2.96	

(1) SCT provides R_{θ}

 © 2026 Silicon Content Technology Co., Ltd. All Rights Reserved

Logic Input(INx,DIAG_EN,THER,SEH,SEL)					
V_{IH}	Logic high-level voltage		1.35	1.55	V
V_{IL}	Logic low-level voltage				

 © 2026 Silicon Content Technology Co., Ltd. All Rights Reserved

I_{CS_H}	Current-sense pin output current	V_{CS} =4.5V	10	22	mA
I_{CS_LKG}	Current-sense leakage current in disabled mode				

 © 2026 Silicon Content Technology Co., Ltd. All Rights Reserved

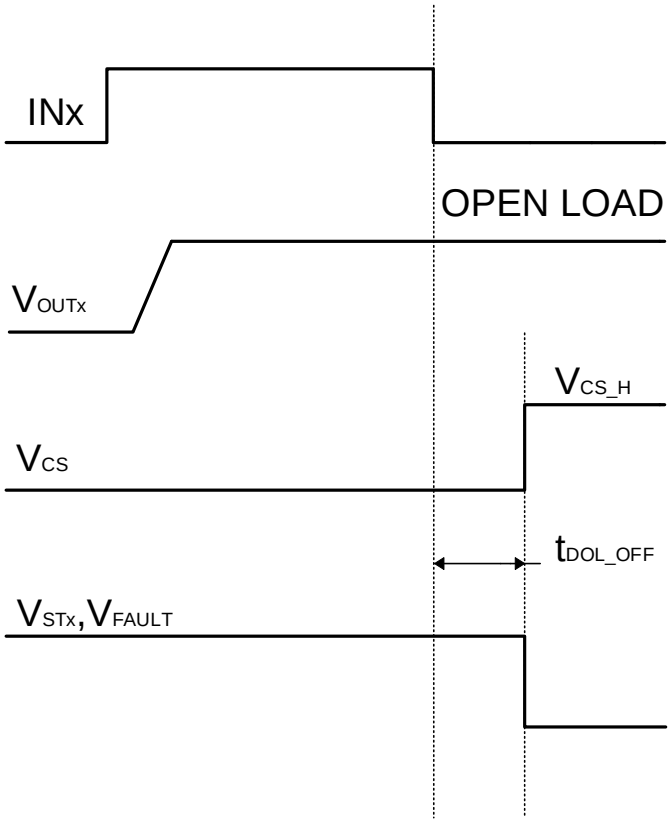

Figure

 © 2026 Silicon Content Technology Co., Ltd. All Rights Reserved

www.silicontent.com © 2026 Silicon Content Technology Co., Ltd. All Rights Reserved

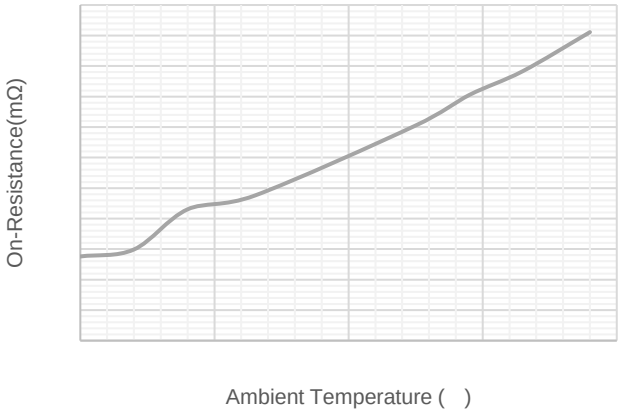

Figure 10. Channel-3 FET On-Resistance VS Temperature

Figure 11. Channel-4 FET On-Resistance VS Temperature

 © 2026 Silicon Content Technology Co., Ltd. All Rights Reserved

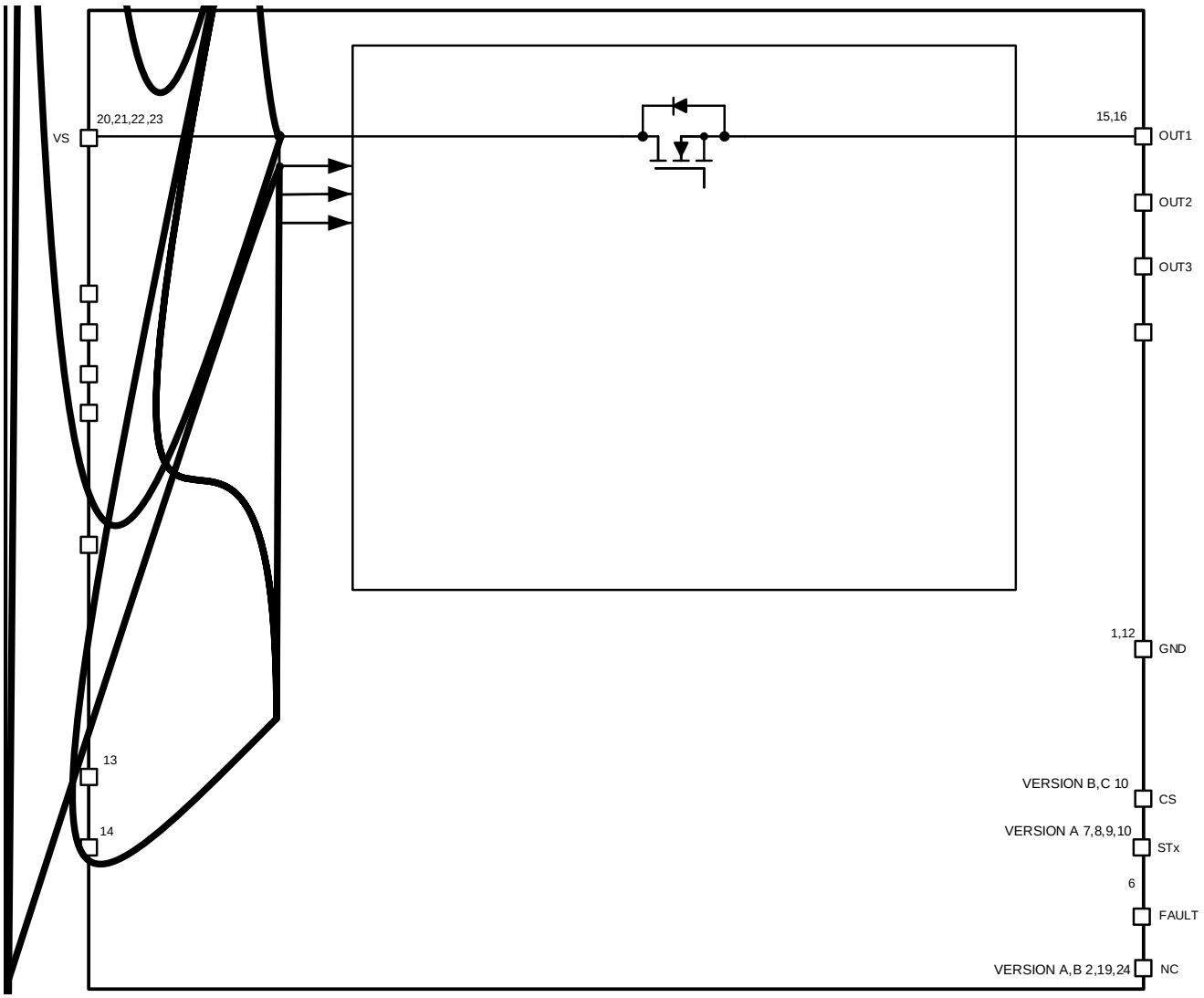

Figure 12. Functional Block Diagram

 © 2026 Silicon Content Technology Co., Ltd. All Rights Reserved

Overview

SCT44160 is a four-channel intelligent high-side switch that internally integrates a charge pump and four power N-MOSFETs. SCT44160 offers external adjustable threshold overcurrent protection functionality, with a typical value of 7A for internal current limiting to enhance design flexibility and system reliability. This device features comprehensive diagnostic functions and high-precision current sensing functions to achieve smart control of the load. Among SCT44160's three versions, Version A includes an open-drain digital output diagnostic mode. Version B provides current sensing analog output. Version C provides four external adjustment functions for overcurrent thresholds based on version B.

In Version A, an open-drain digital output is utilized, and the diagnostic output pin STx needs to be pulled down to the ground externally by providing a pull-up voltage of 3.3V or 5V to match the MCU. The abnormal status of each channel in version A can be reported separately to help the system quickly locate problematic channels.

Version B has a current sensing analog output, enabling the system to accurately determine the operational status of each channel. The integrated current mirror of the device provides a mirror current of $1/K_{CS}$ load current, which flows through the CS resistor and becomes a voltage signal to achieve analog output of load current. Version B can achieve the current information detection function for each channel through cyclic selection of SEH SEL pins. Additionally, in the event of an abnormality in a specific channel, the global diagnostic function of the Fault pin can be employed to pinpoint the problematic channel.

The diagnostic function of version C is consistent with version B, but version C can set four overcurrent thresholds separately. Four overcurrent thresholds can be reasonably set according to the application environment, further improving the flexibility and reliability of system design.

SCT44160 has a clamping function between the drain and source electrodes, which can effectively protect itself under inductive load conditions.

SCT44160 is an intelligent high-side switch suitable for applications where resistance, capacitance, and inductance loads can support most small load currents.

Adjustable Current Limit

SCT44160 has an adjustable high-precision current limitation mechanism. When the load current reaches the

 © 2026 Silicon Content Technology Co., Ltd. All Rights Reserved

- 0.00(e)-9(l-82DC g -5(wort4 9.96 TSpan -0.0( )-10W* n Bn)-7(d)-6)3(c)-5(haUS)>> BDC gpan <</MCID 91/Lang (en-US)>>T / Fopi-5(

Accurate Current Sense

 © 2026 Silicon Content Technology Co., Ltd. All Rights Reserved

SEL pins for multi-channel current detection and fault report multiplexing, and select the corresponding channel of the CS pin to read whether the voltage of the CS pin is V

 © 2026 Silicon Content Technology Co., Ltd. All Rights Reserved

IC GND and the DIAG_EN or THER pin connected to external ground. Regardless of whether INx is high or low, the channels will be deactivated for protection.

Thermal Shutdown

Under extreme conditions like overcurrent, the device undergoes substantial power stress and heats up rapidly. SCT44160 incorporates two types of thermal protection: absolute thermal protection and relative thermal protection. These are designed to prevent rapid overheating of the device without protection.

When absolute overheating occurs, the thermal shutdown will be triggered, and the behavior after thermal shutdown can be determined by configuring THER:

1.

 © 2026 Silicon Content Technology Co., Ltd. All Rights Reserved

 © 2026 Silicon Content Technology Co., Ltd. All Rights Reserved

MCU I/O Protection

In some extreme cases, such as inductive load input disconnection, negative voltage pulses may appear in the IC

 © 2026 Silicon Content Technology Co., Ltd. All Rights Reserved

Typical Application

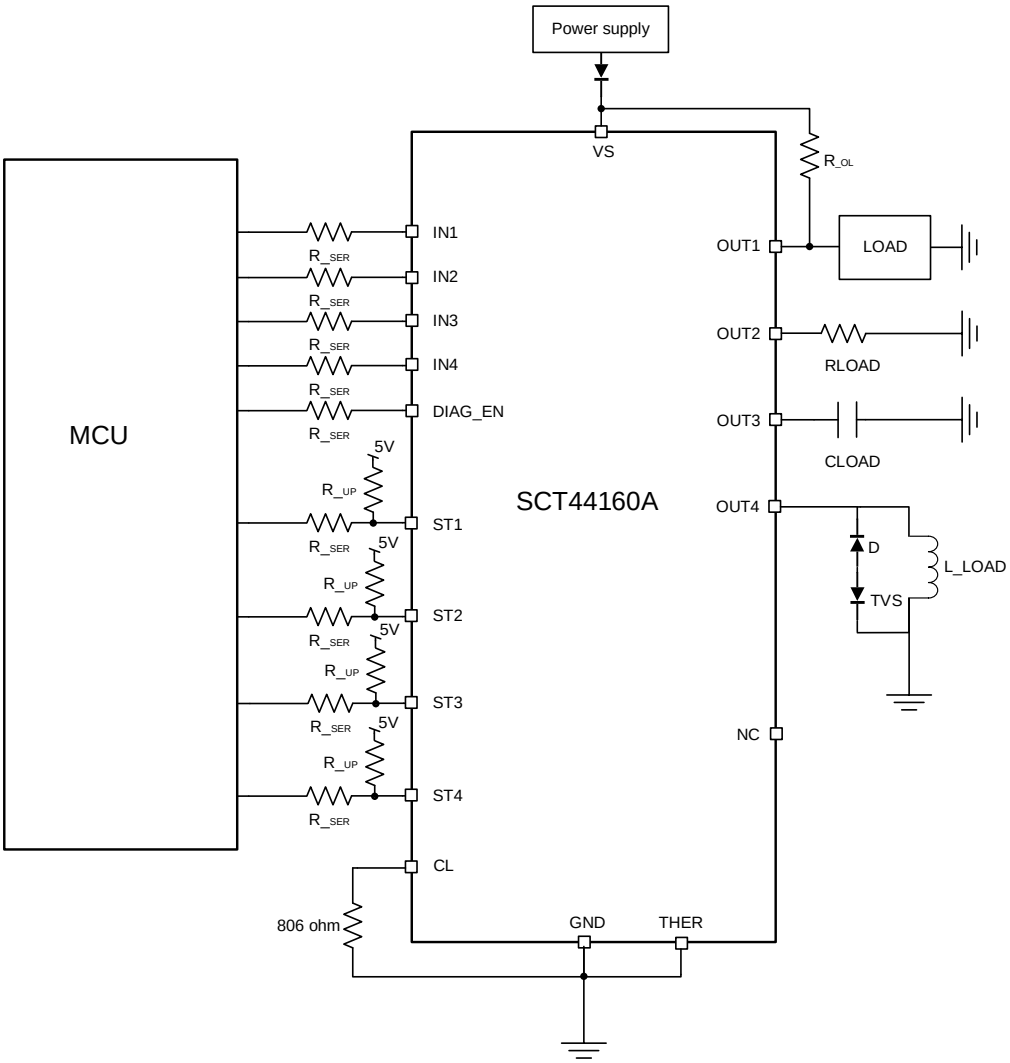

Figure 19. Version A Application Schematic

Design Parameters

Design Parameters

 © 2026 Silicon Content Technology Co., Ltd. All Rights Reserved

Typical Application (continued)

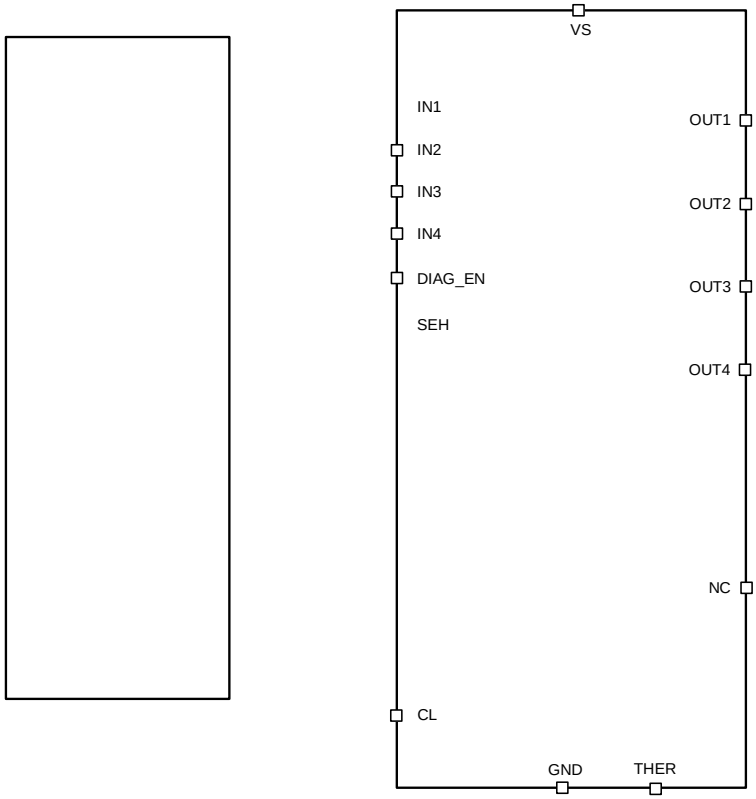

Figure 20. Version B Application Schematic

Design Parameters

Design Parameters	Example Value
Input Voltage	13.5V Normal 8V to 18V
Load Current	Typical 1A
Current Limit	2.5A

 © 2026 Silicon Content Technology Co., Ltd. All Rights Reserved

Typical Application (continued)

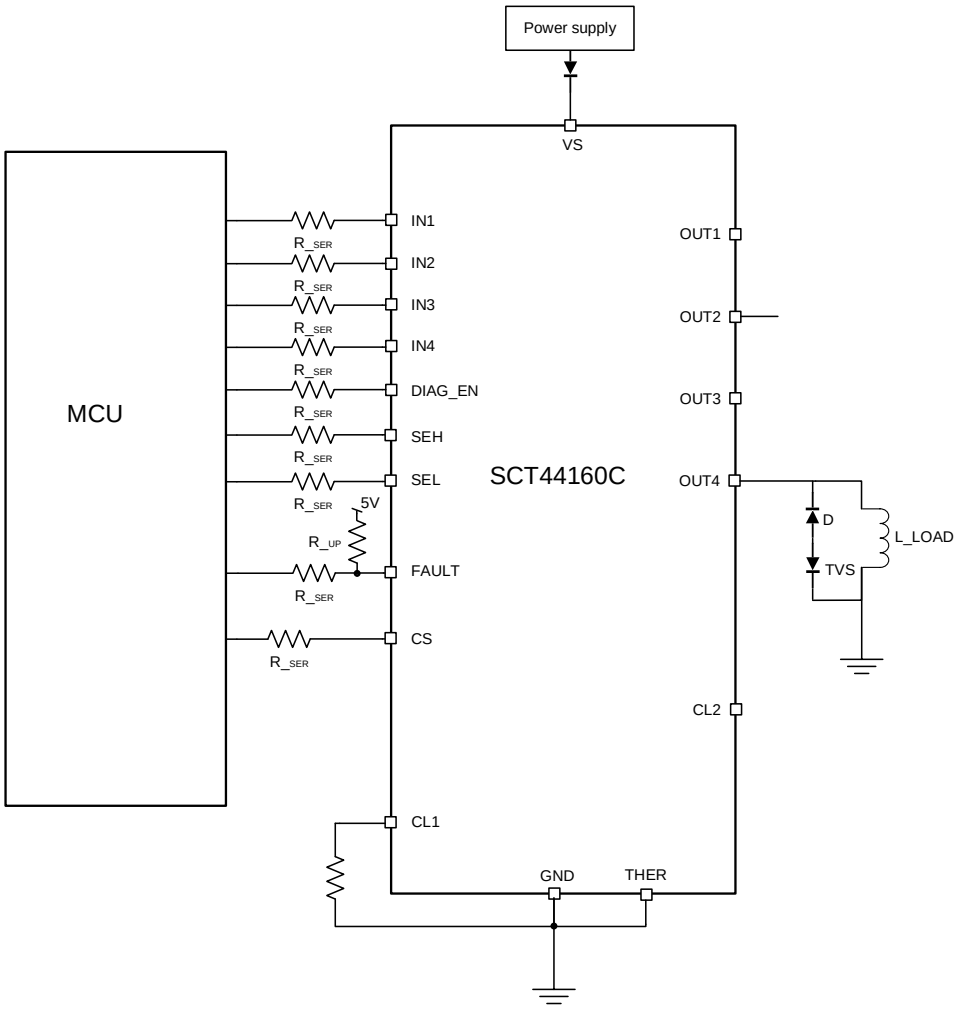

Figure 21. Version C Application Schematic

Design Parameters

Design Parameters	Example Value
Input Voltage	13.5V Normal 8V Ě Ï

 © 2026 Silicon Content Technology Co., Ltd. All Rights Reserved

Application Waveforms

V_{VS}=13.5V, unless otherwise noted

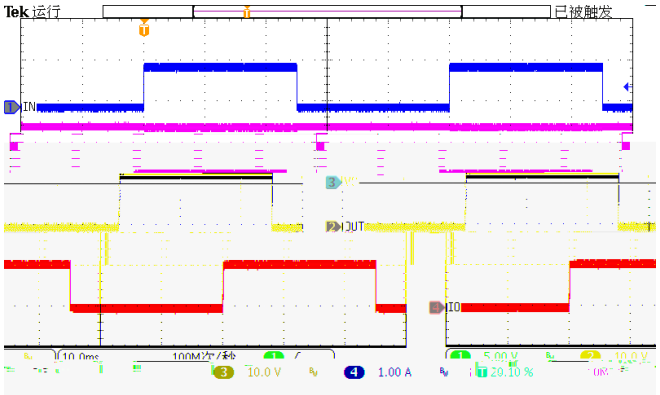

Figure 22. IN Toggle resistive load 1A

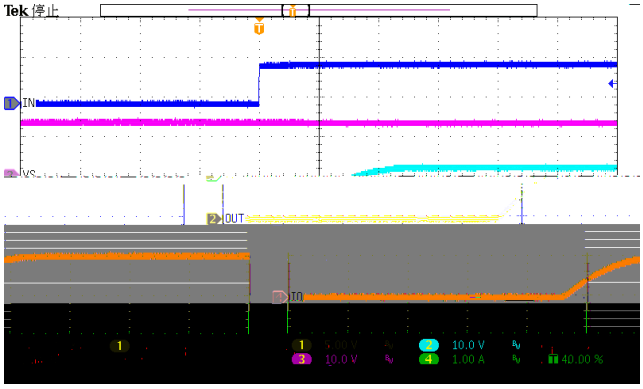

Figure 23. IN On resistive load 1A

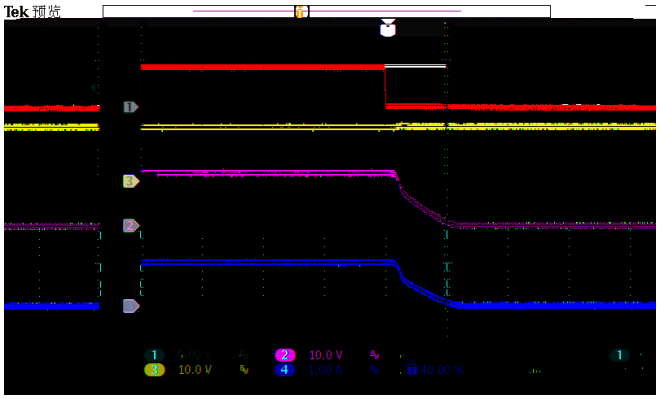

Figure 24. IN Off resistive load 1A

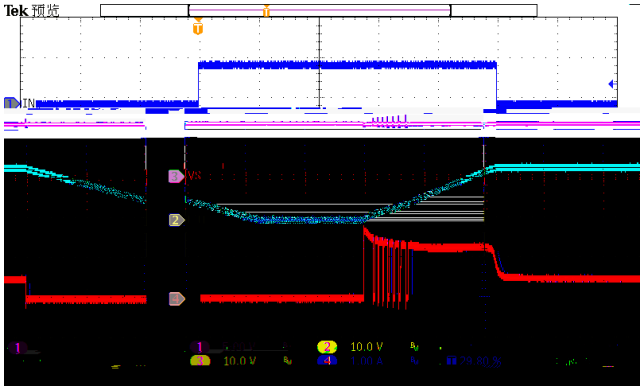

Figure 25. IN Toggle capacitive load C=2.2mF

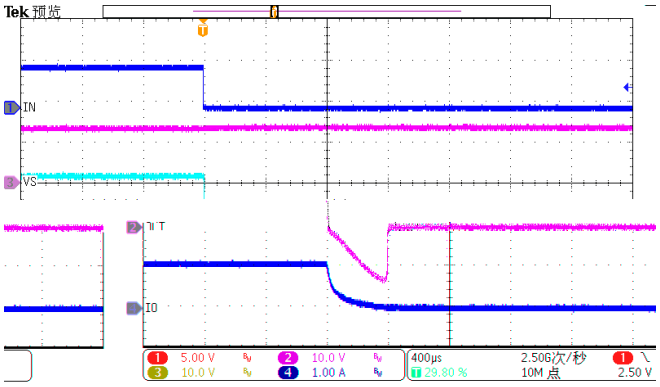

Figure 26. IN Off Inductive load L=8mH series resistor=13.5Ω

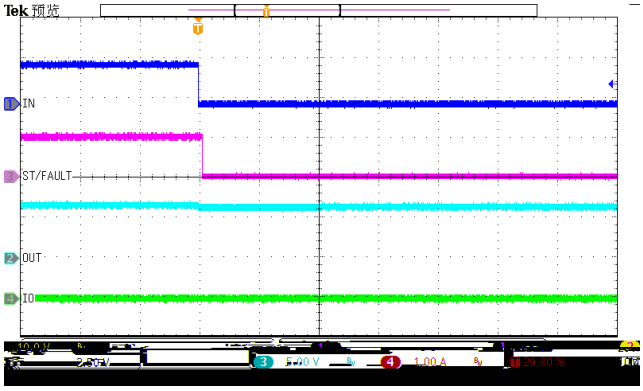

Figure 27. Open-load detection

 © 2026 Silicon Content Technology Co., Ltd. All Rights Reserved

Application Waveforms(continued)

V_{VS}=13.5V, unless otherwise noted

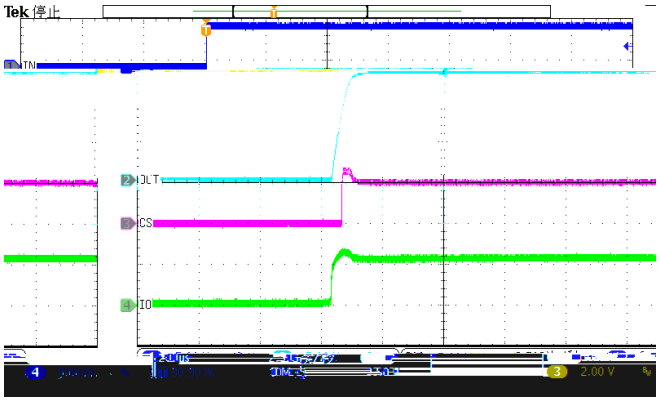

Figure 28. IN On current sense load=0.5A

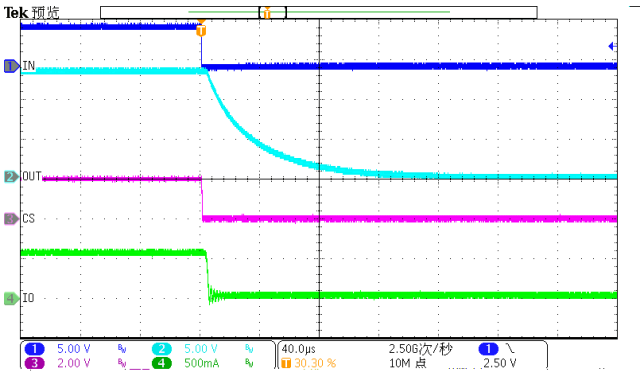

Figure 29. IN Off current sense load=0.5A

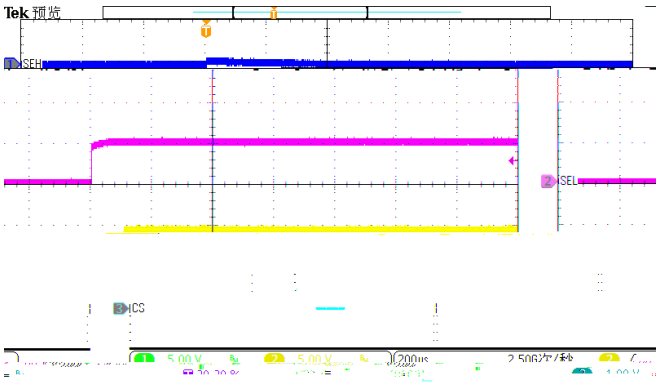

Figure 30. Current sense CH1-CH2

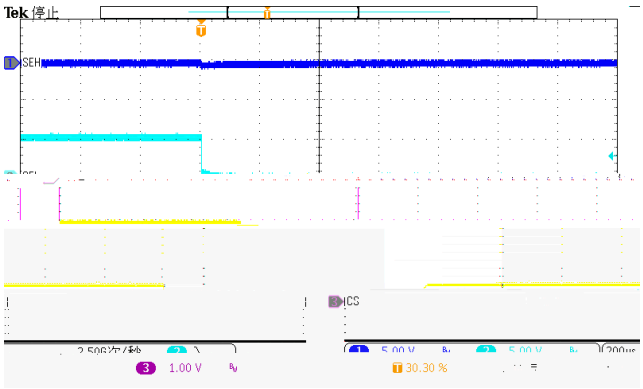

Figure 31. Current sense CH2-CH1

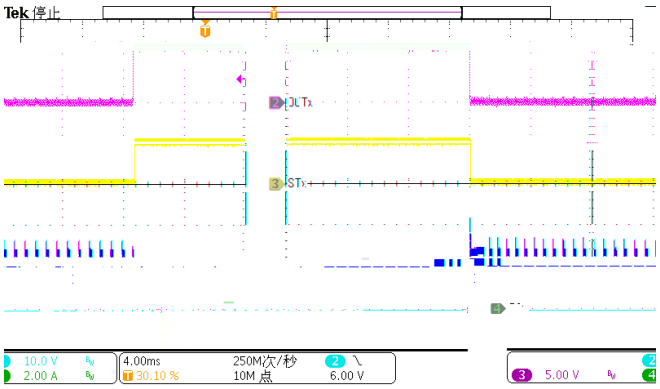

Figure 32. Overcurrent detection for version A

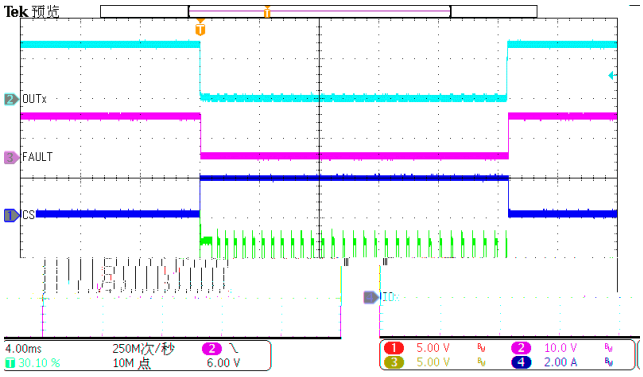

Figure 33. Overcurrent detection for version B/C

 © 2026 Silicon Content Technology Co., Ltd. All Rights Reserved

Layout Guideline

The PCB layout is very important. Good PCB design can optimize heat transfer, which is absolutely essential for the long-term reliability of the device

 © 2026 Silicon Content Technology Co., Ltd. All Rights Reserved

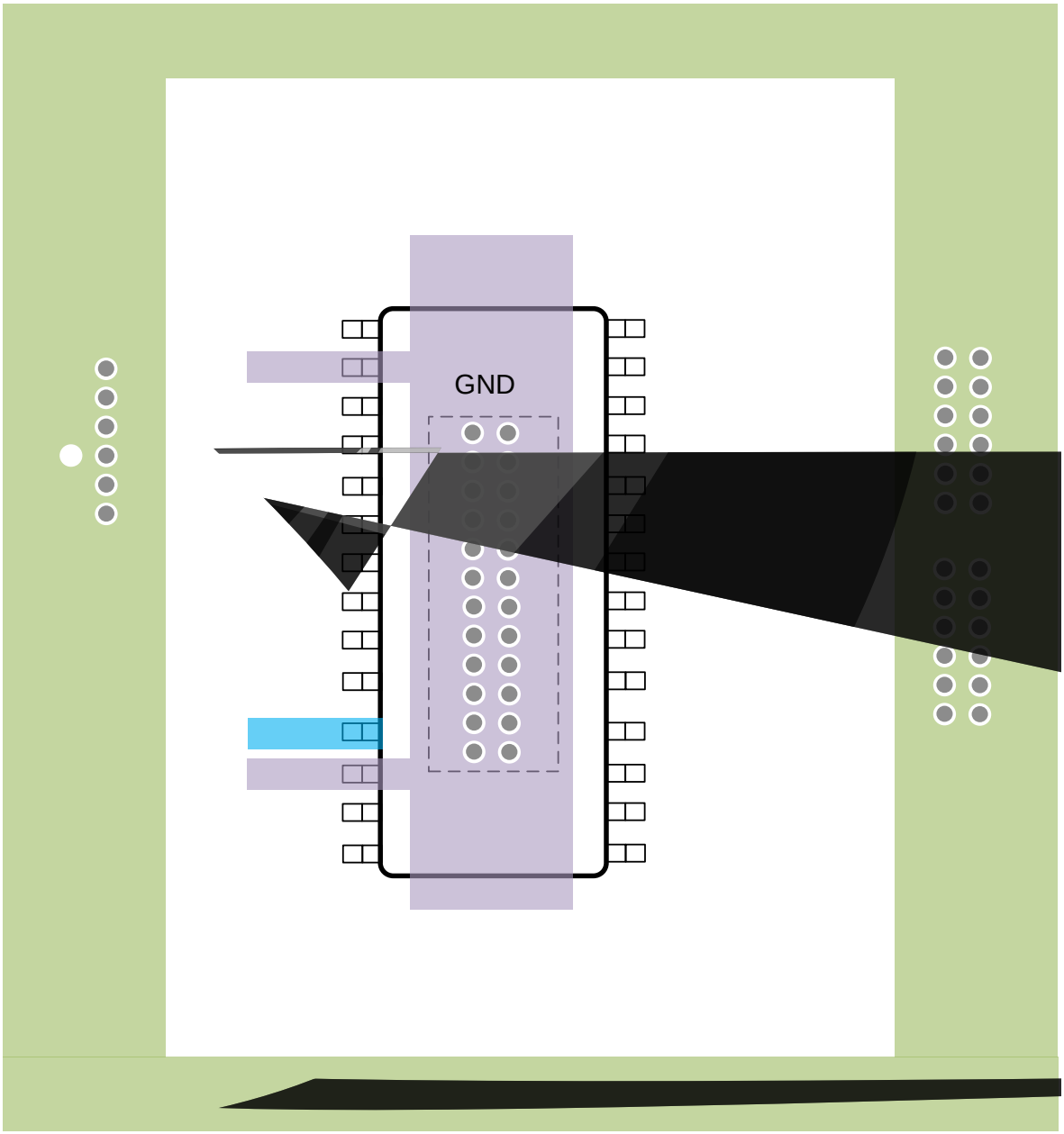

Figure 35. With a GND Network PCB Layout

 © 2026 Silicon Content Technology Co., Ltd. All Rights Reserved

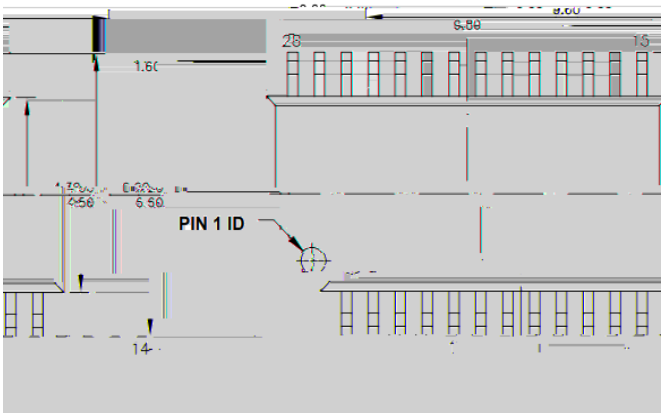

TOP VIEW

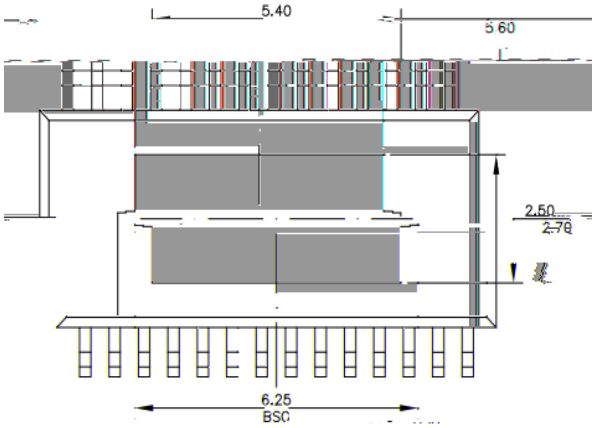

BOTTOM VIEW

[redacted]

FRONT VIEW

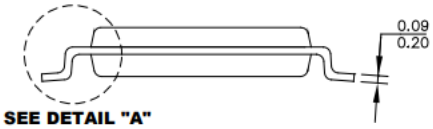

SIDE VIEW

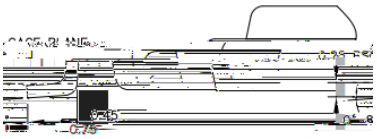

DETAIL "A"

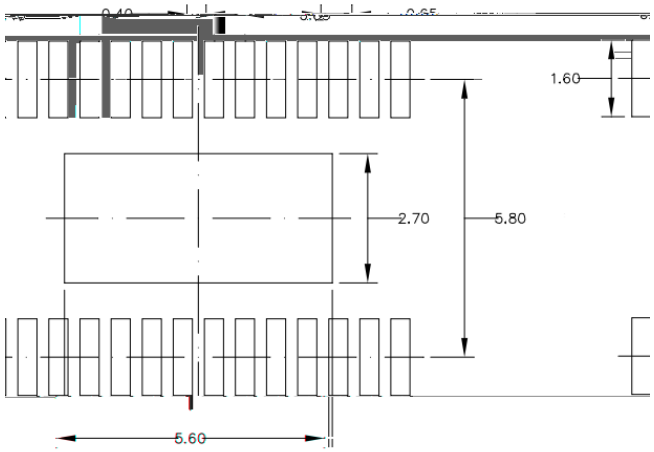

RECOMMENDED LAND PATTERN

NOTE:

1. ALL DIMENSIONS ARE IN MILLIMETERS..
2. PACKAGE LENGTH DOES NOT INCLUDE MOLD FLASH, PROTRUSION OR GATE BURR.
3. PACKAGE WITDH DOES NOT INCLUDE INTERLEAD FLASH OR PROTRUSION.
4. LEAD COPLANARITY (BOTTOM OF LEADS AFTER FORMING) SHALL BE 0.10 MILLIMETERS MAX.
5. DRAWING CONFORMS TO JEDEC MO-153, VARIATION ABT.
6. DRAWING IS NOT TO SCALE.

 © 2026 Silicon Content Technology Co., Ltd. All Rights Reserved

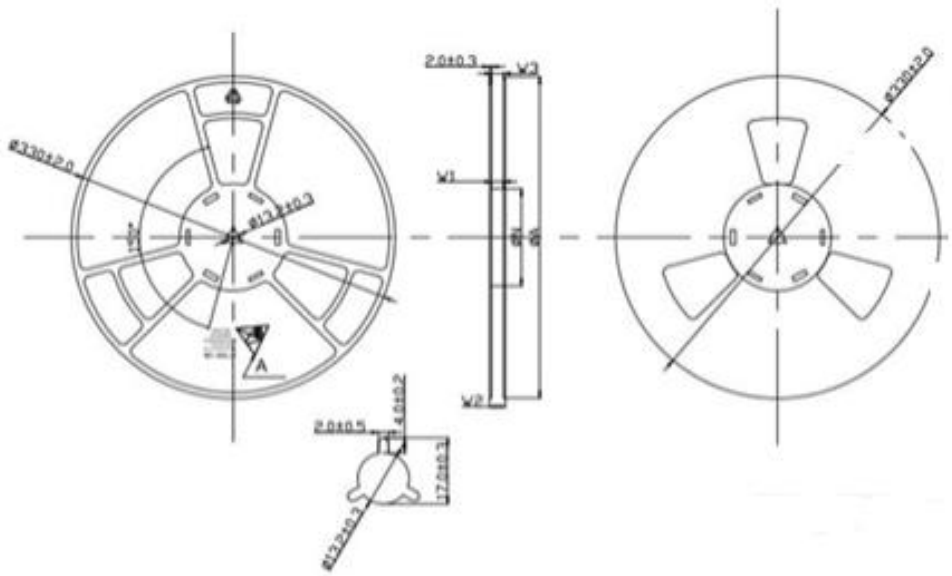

PRODUCT SPECIFICATIONS					
TYPE WIDTH	ØA	ØN	W1(+0.0)	W2(Max)	W3(Max)
16MM	330±2.0	100±1.0	16.4	22.4	15.9/19.4

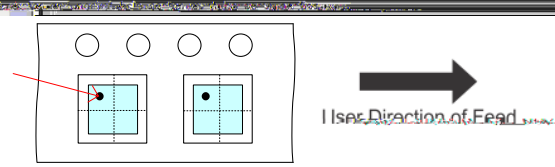

 © 2026 Silicon Content Technology Co., Ltd. All Rights Reserved